FREEDOM SHOWERS
BY ACCESSIBILITY PROFESSIONALS

# Freedom Walk-in Shower Kit 60" x 32", Shower Door, Right Seat

**BASE MODEL: APE3260SH4PSR-SD**

Select the appropriate finish suffix:

## CHOOSE YOUR ACCESSORY FINISH:

Every kit includes the sliding shower door, three grab bars, and drain assembly – all supplied in your coordinated finish for installation in the field.

**Matte Black** MB

**MODEL: APE3260SH4PSR-SD-MB**

**Polished Stainless** PS

**MODEL: APE3260SH4PSR-SD-PS**

**Satin Stainless** SS

**MODEL: APE3260SH4PSR-SD-SS**

**EXTERIOR DIMENSIONS:** 60" width x 32" depth x 77 1/2" height

### FEATURES:

- 4-piece shower design for easy remodeling
- 4" easy step, low-threshold entrance
- Choice of three coordinated accessory finishes
- Pre-leveled shower base
- Reinforced walls for installation of accessories
- Durable fiberglass construction
- Applied acrylic finish
- Accessory shelves
- 19" x 19" Right-hand molded seat (left-hand model also available) with 250 lbs. weight capacity

### COMPLETE ACCESSORY PACKAGE

Accessories included in every kit:

- 1 x Sliding shower door, 60"W x 70"H
- 3 x 24" Grab bars made of stainless steel
- 1 x Brass drain with round drain cover

Made in USA

30-Year Warranty on Shower Stall

# Freedom Walk-in Shower Kit 60" x 32", Shower Door, Right Seat

**BASE MODEL: APE3260SH4PSR-SD**

Select the appropriate finish suffix

**DIMENSIONS SHOWN APPLY TO ALL THREE ACCESSORY FINISH MODELS**

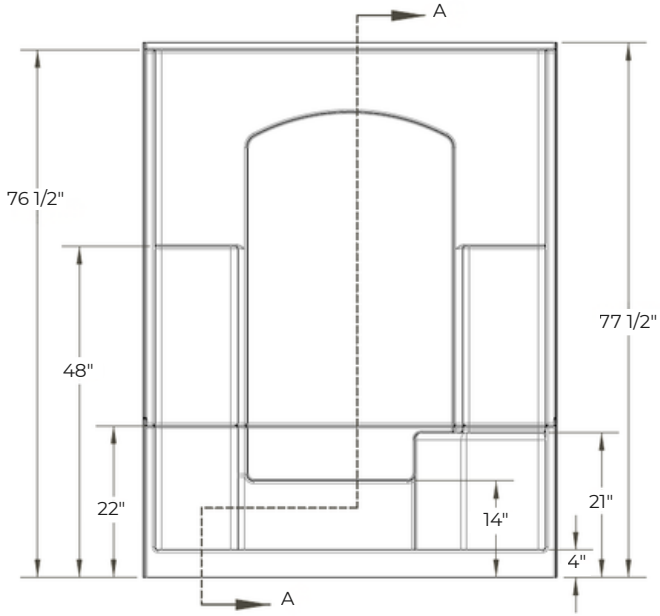


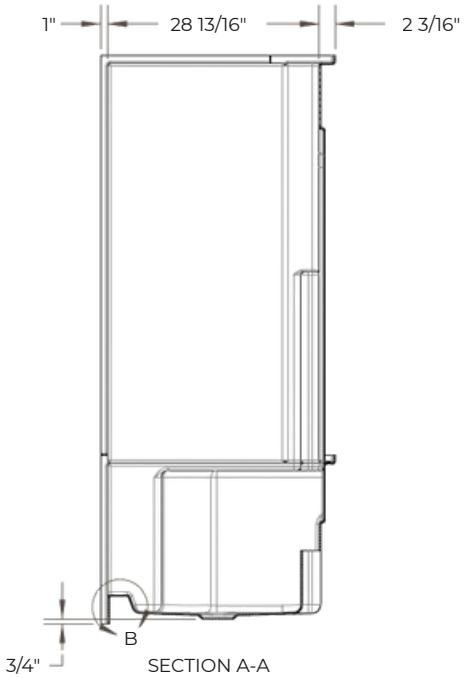


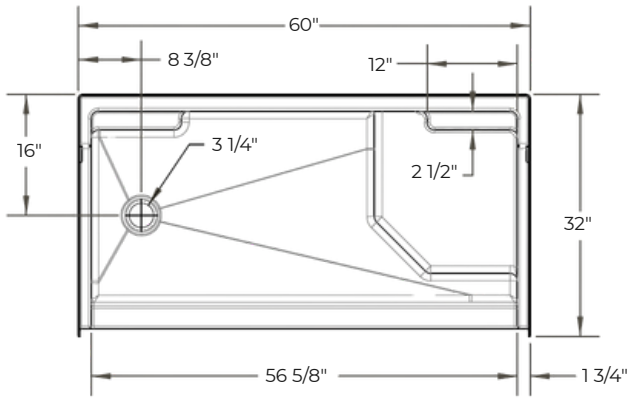


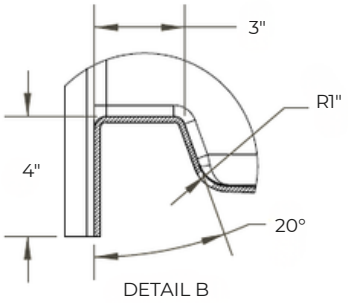


## NOTES:

Dimensional Tolerance ± 3/8". Verify all dimensions and site conditions before installation. Accessibility Professionals Inc. assumes no responsibility for prep work.

## CODE COMPLIANCE:

- IPC International Plumbing Code
- UPC Uniform Plumbing Code
- ANSI Z124.2 Standards for Plastic Showers
- HUD

## FRAME-IN DIMENSIONS:
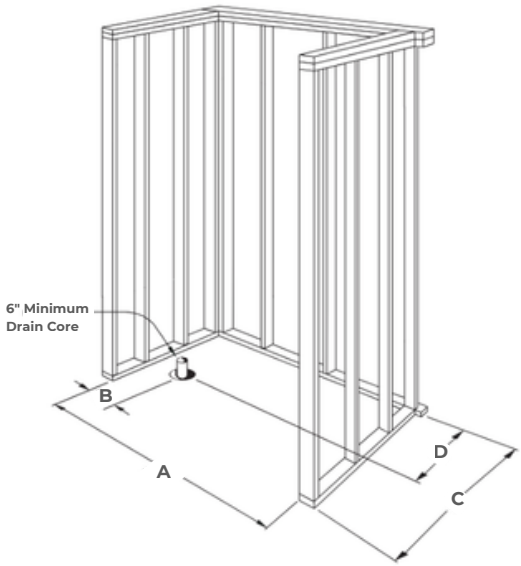
| | |
|---|---|
| A | 60 1/4" |
| B | 8 1/2" |
| C | 32" |
| D | 16" |