FREEDOM SHOWERS
BY ACCESSIBILITY PROFESSIONALS

APC6236BF1PT Accessory Package

PART #: APCACCPKG6336SD L/R

NOTE:
- Right handed seat placement shown above
- Handheld and mixing valve sold separately
- ADA compliant with correct ADAAG accessory installation

Factory-installed accessories can ensure precise ADA-compliant placement and reduce installation time. Available for right- or left-hand installation.

FACTORY-INSTALLED PACKAGE INCLUDES:

- Fold-up L-shaped shower seat with legs
- 1 x L-shaped grab bar - size 30" x 37.5"
- 1 x straight grab bar - length 18"
- Recessed soap dish
- Curtain rod
- Drain and stainless steel strainer

INDIVIDUAL ACCESSORIES AVAILABLE:

- Fold-up reversible shower bench
- Grab bars, straight and corner
- Adjustable handheld shower kit with bar
- ADA pressure-balanced shower valve
- Weighted shower curtain and rod
- Drain and stainless steel strainer

ADA L-Shaped Shower Seat

MODEL: APCSSL2-30225PWSFI / APCSSR2-30225PWSFI

ADA folding shower seats feature durable, water-resistant phenolic slats with a stainless steel frame and legs, supporting up to 1,000 lbs.

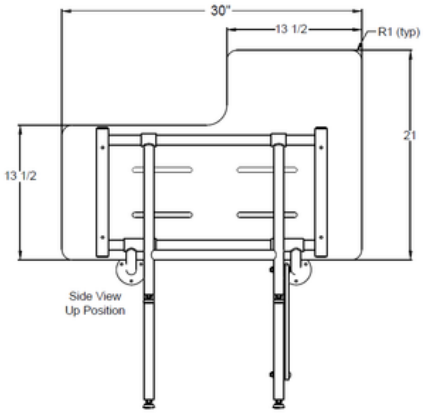

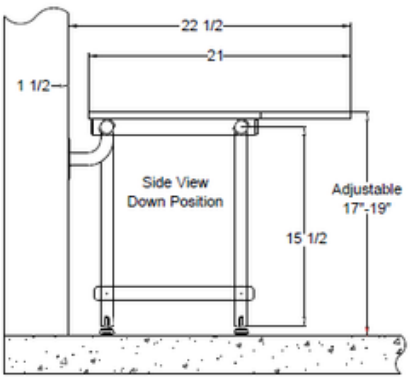

APC6236BF1PT Accessory Package

PART #: APCACCPKG6336SD L/R

L-Shaped Grab Bar

MODEL: APCGB3037SSFI

Satin stainless steel L-Shaped grab bars are installed at the factory and can support up to 250 lbs.

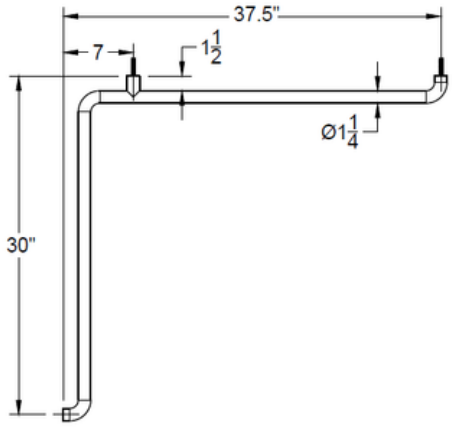

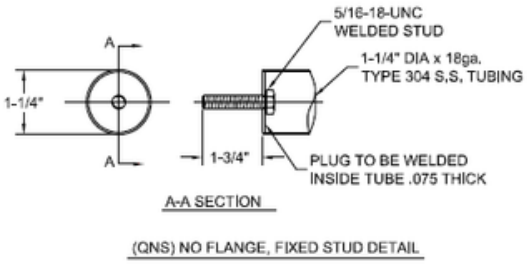

Straight Grab Bar

MODEL: APCGB2837SSFI

Satin stainless steel straight grab bars are installed at the factory and can support up to 250 lbs.

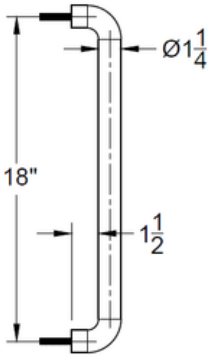

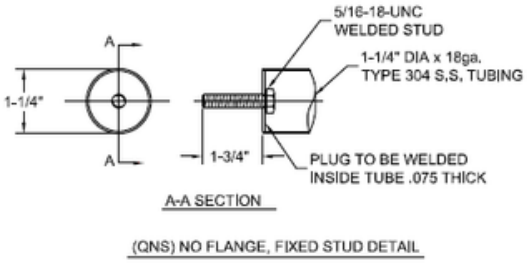

Drain Assembly

MODEL: APCACCPKG6336SD

Brass body with stainless steel strainer.

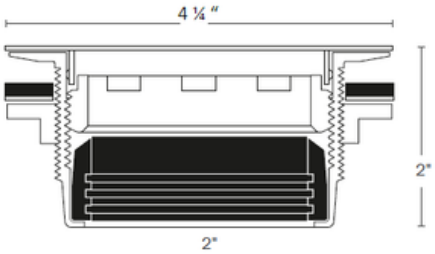

Recessed Soap Dish

MODEL: APCSDSSFI

Stainless steel recessed soap dish with lip.

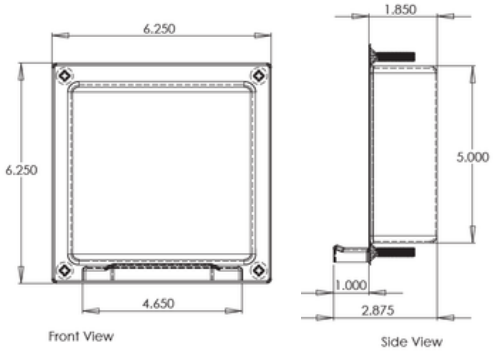

Curtain Rod
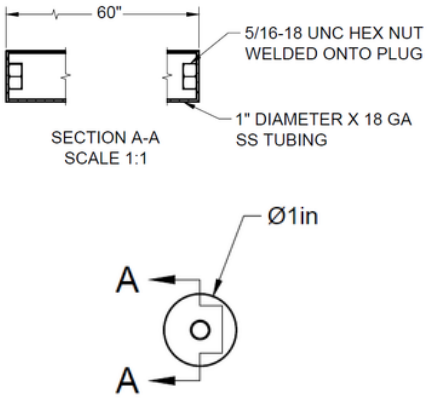
MODEL: APFCRSS60FI